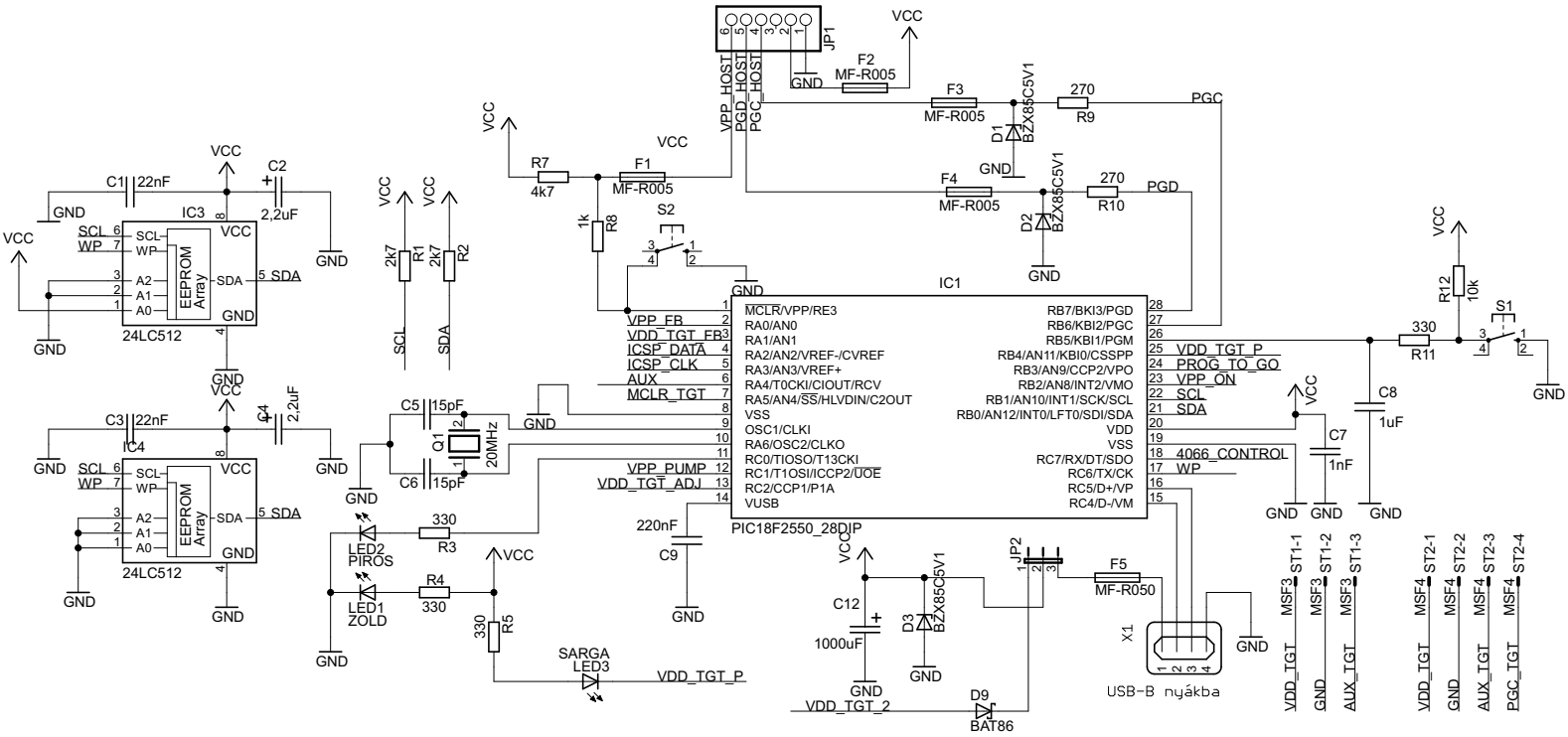
JP1
VPP_HOST
PGD_HOST
PGC_HOST
F2
MF-R005
F3
MF-R005
D1
BZX85C5V1
270
R9
PGC
F4
MF-R005
D2
BZX85C5V1
270
R10
PGD
R7
4k7
F1
MF-R005
1k
R8
S2
IC1
PIC18F2550_28DIP
MCLR/VPP/RE3
RA0/AN0
RA1/AN1
RA2/AN2/VREF-/CVREF
RA3/AN3/VREF+
RA4/T0CKI/CIOUT/RCV
RA5/AN4/SS/HLVDIN/C2OUT
VSS
OSC1/CLKI
RA6/OSC2/CLKO
RC0/TIOSO/T13CKI
RC1/T1OSI/ICCP2/UOE
RC2/CCP1/P1A
VUSB
RB7/BKI3/PGD
RB6/KBI2/PGC
RB5/KBI1/PGM
RB4/AN11/KBI0/CSSPP
RB3/AN9/CCP2/VPO
RB2/AN8/INT2/VMO
RB1/AN10/INT1/SCK/SCL
RB0/AN12/INT0/LFT0/SDI/SDA
VDD
VSS
RC7/RX/DT/SDO
RC6/TX/CK
RC5/D+/VP
RC4/D-/VM
VPP_FB
VDD_TGT_FB
ICSP_DATA
ICSP_CLK
AUX
MCLR_TGT
VPP_PUMP
VDD_TGT_ADJ
VDD_TGT_P
PROG_TO_GO
VPP_ON
SCL
SDA
4066_CONTROL
WP
R12
10k
S1
330
R11
C8
1uF
C7
1nF
C1
22nF
C2
2,2uF
IC3
24LC512
EEPROM Array
SCL
WP
A2
A1
A0
SDA
2k7
R1
2k7
R2
C3
22nF
C4
2,2uF
IC4
24LC512
C5
15pF
Q1
20MHz
C6
15pF
LED2
PIROS
330
R3
LED1
ZOLD
R4
330
330
R5
SARGA
LED3
VDD_TGT_P
220nF
C9
C12
1000uF
D3
BZX85C5V1
JP2
F5
MF-R050
X1
USB-B nyákba
D9
BAT86
VDD_TGT_2
VCC
GND
ST1-1
ST1-2
ST1-3
ST2-1
ST2-2
ST2-3
ST2-4
MSF3
MSF4
VDD_TGT
GND
AUX_TGT
PGC_TGT