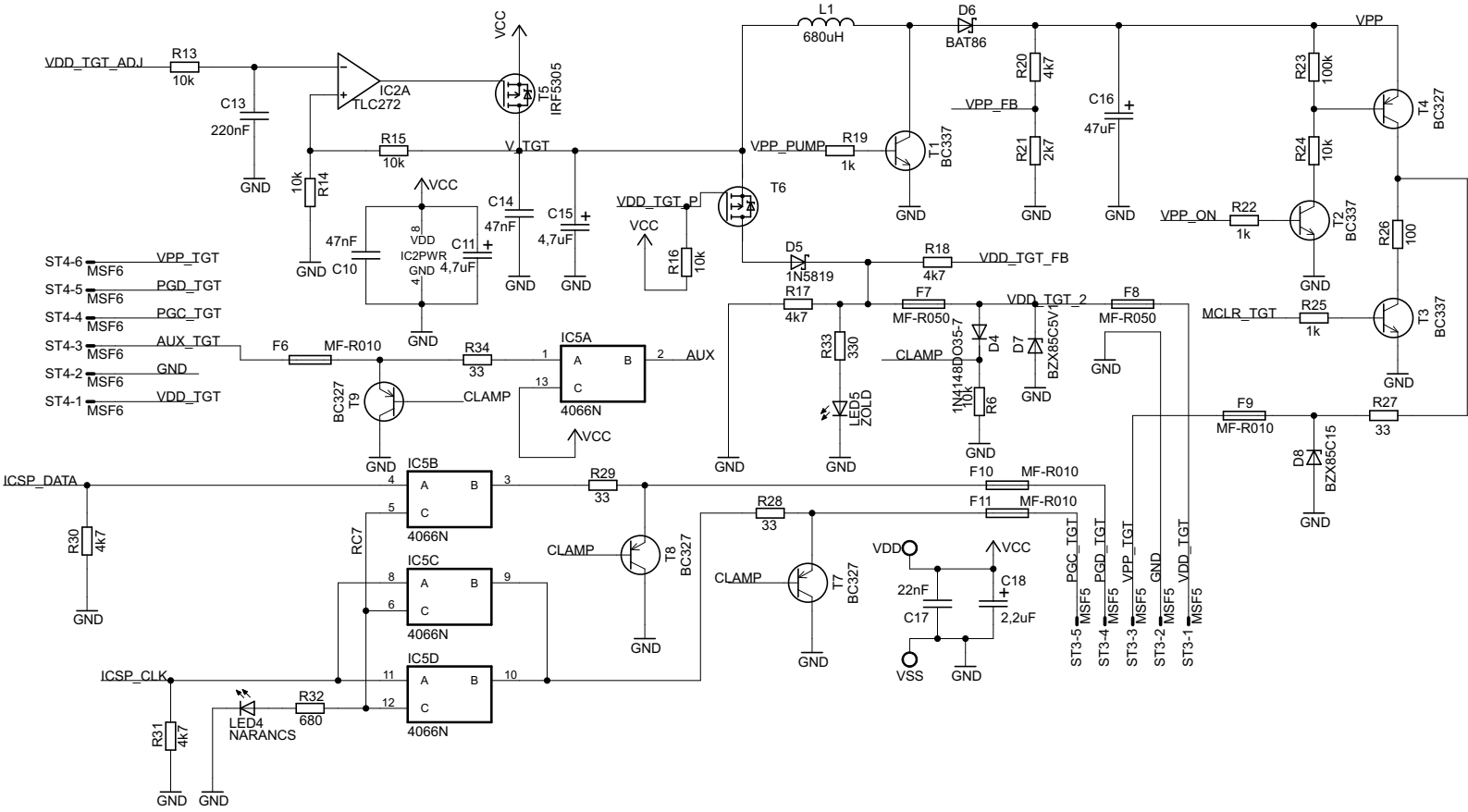

2010.09.18. 13:21:41 f=0.79 E:\Doksi\PICkit2\PICkit2_tervek\pickit2v211.sch (Sheet: 2/2)